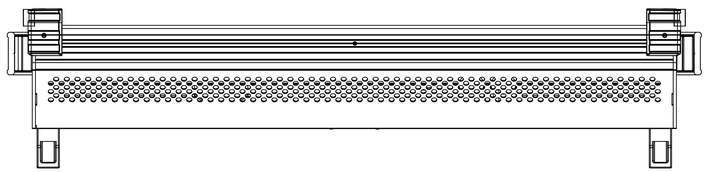

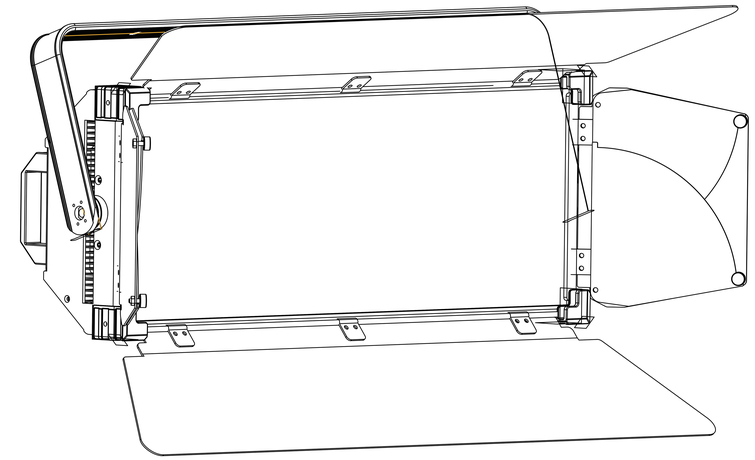

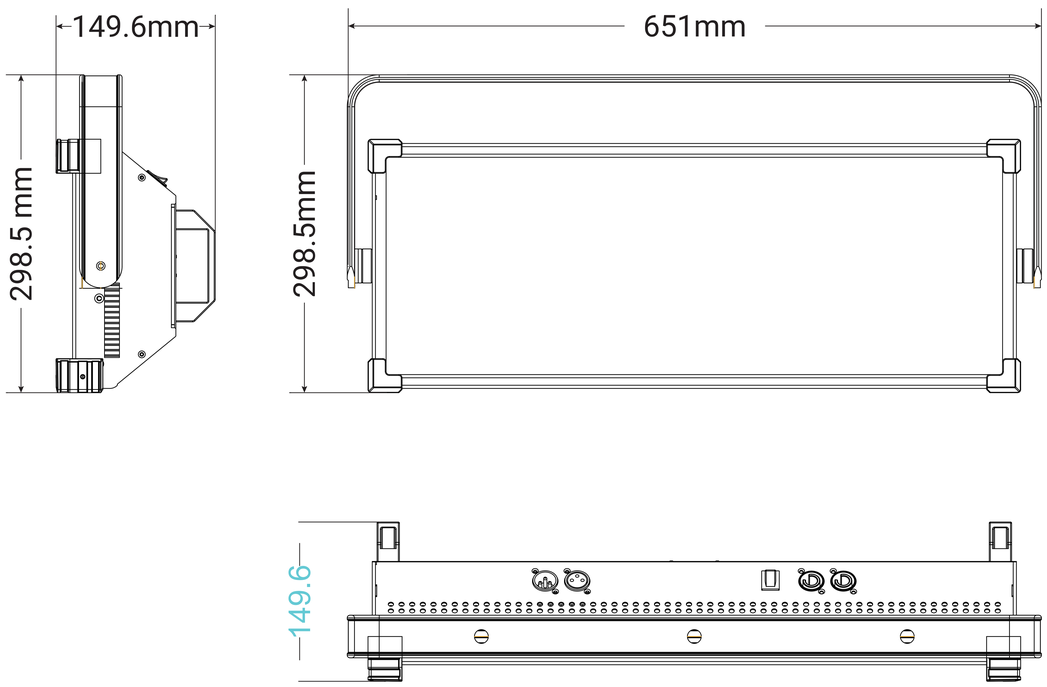
149.6mm
651mm
298.5 mm
298.5mm
149.6

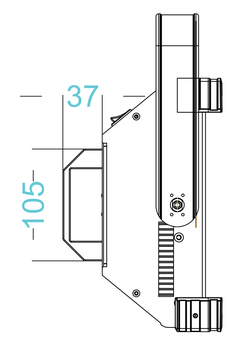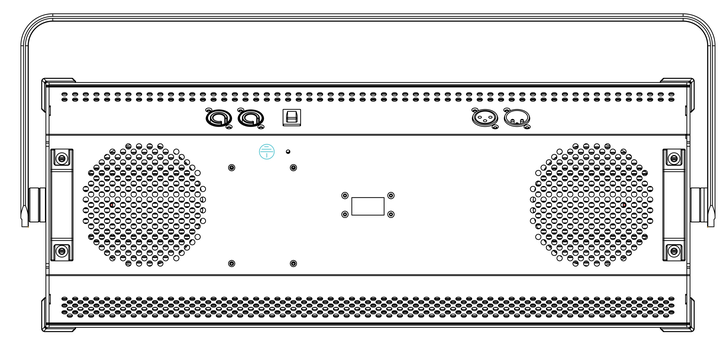
37
105