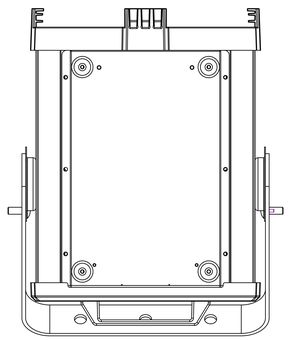

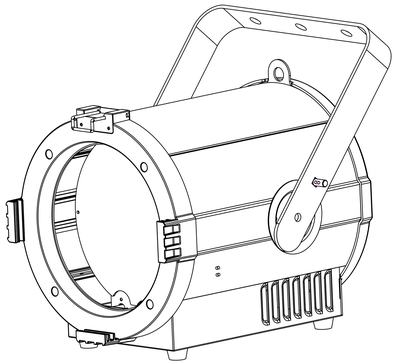

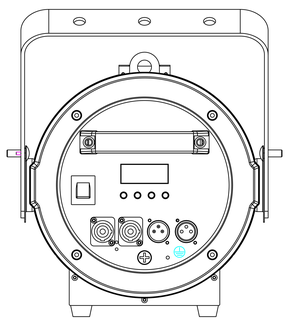

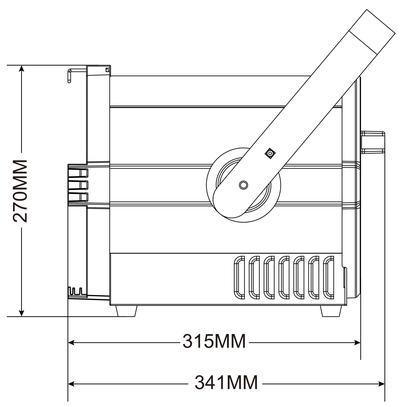
270MM
315MM
341MM

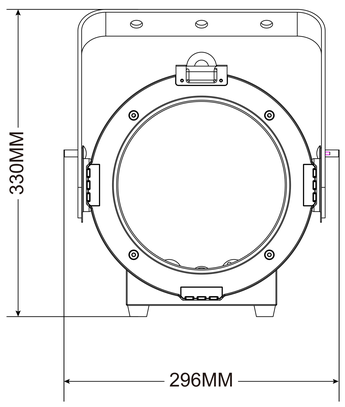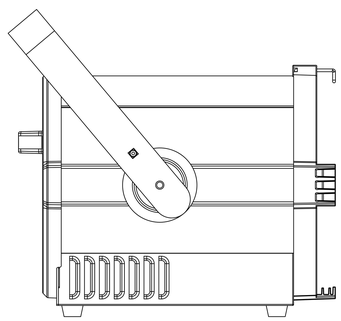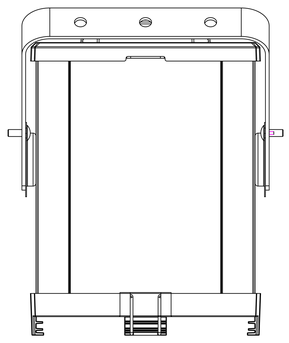
330MM
296MM